Pegaso

2020

Pegaso

HEAT, TECHNOLOGY AND **ITALIAN DESIGN**

Pegaso is a brand owned by MCZ Group, Europe's leading manufacturer of pellet stoves

THE COMPANY

Choosing Pegaso means appreciating the values of Italian-made manufacturing: innovation, quality and compliance with environmental regulations are the Group's core values that underpin the entire production process.

MADE IN ITALY

Pegaso

TARGET

Pegaso is a benchmark brand conceived as an easy way of entering the domestic pellet heating market.
A brand for the wholesale and ironmongery channel.

CERTIFICATIONS

All Pegaso products meet performance and emission requirements and quality standards.

THE RANGE

A full range of pellet stoves with a contemporary design that meets different power, space and functionality requirements.

VERA 7
7 KW
pag. 6

MADISON 5
5,2 kW
pag. 10

SABA 14
14 kW
pag. 14

MIRA 16
16 kW
pag. 16

ELANE
8,6 kW
pag. 8

TABLA
7 kW
pag. 12

MIRA 22
22,8 kW
pag. 18

VERA 7 NEW

A 7 kW air pellet stove with a simple, minimalist design, easy to use and with painted steel cladding.

AIR CLASSIC

VERA 7 white

7 kW

Metal structure, sides, door and top
Cast iron burning pot
Daily/weekly programming.
Designed for connection to the external thermostat
Remote control available as optional extra

7 kW	26,8 - 9,1 h
2,6 kW	49 W
7,7 kW	55 kg
90 %	45,2 x 45,7 x H 90,7 cm
15 kg	0,50 m³
Pellet Ø 6 mm	Ø 80 mm rear
0,56 - 1,65 kg/h	Ø 60 mm

VERA 7 anthracite

VERA 7 red

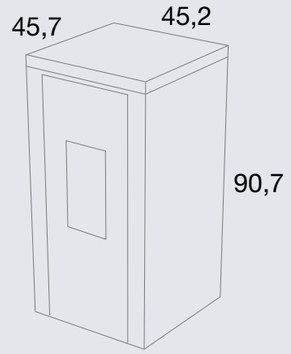

STOVE PACKAGING

W (cm)	H (cm)	D (cm)
80	104,3	60

VOLUME (m³)
0,50

STORAGE

N° (max)
2

EUROPEAN STANDARDS

CE
EN 14785:2006

ECO DESIGN 2022 conforming

BImSchV 2015
Regensburg
München
Stuttgart
Aachen

CONTO TERMICO

OK BBC

A+
ENERGY LABELLING

★★★★
Prodotto in possesso dei requisiti per il raggiungimento delle 4 stelle ARIA PULITA.

ELANE

An 8.5 kW air pellet stove with painted steel cladding and a large pellet tank.

AIR CLASSIC

ELANE red

8,6 kW

Metal structure, sides, door and top
Cast iron burning pot
Daily/weekly programming
Designed for connection to the external thermostat
Remote control available as optional extra

ELANE white

ELANE anthracite

MAX	8,6 kW		34 - 9 h
MIN	2,4 kW		76 W
	9,73 kW		78 kg
%	89,1 %		52,5 x 48,6 x H 96,4 cm
	18 kg		0,55 m^3
	Pellet Ø 6 mm		Ø 80 mm rear
	0,53 - 2,01 kg/h		Ø 60 mm

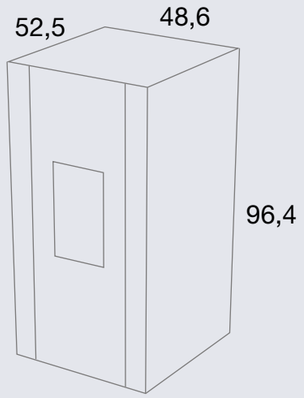

STOVE PACKAGING

W (cm)	H (cm)	D (cm)
80	114,3	60

VOLUME (m^3)
0,55

STORAGE

N° (max)
2

EUROPEAN STANDARDS

CE
EN 14785:2006

ECO DESIGN 2022 conformity

CONTO TERMICO

A+
ENERGY LABELLING

certificazione ariaPULITA ★★★★
ZM8-P-025
certificazionearialpulita.it

BImSchV 2015
Regensburg
München
Stuttgart
Aachen

OK BEC

MADISON 5

'Space-saving' air pellet stove specifically designed and built for small domestic spaces. Painted steel cladding and cast iron door.

AIR SLIM

MADISON 5 anthracite

5,2 kW

Metal structure, sides and top
Cast iron burning pot and door
Daily/weekly programming
Designed for connection to the external thermostat
Remote control available as optional extra

MADISON 5 white

MADISON 5 red

MAX	5,2 kW		21,1 - 9,7 h
MIN	2,5 kW		62 W
	5,8 kW		55 kg
%	89,5 %		60 x 27,5 x H 95,5 cm
	12 kg		0,38 m³
	Pellet Ø 6 mm		Ø 80 mm Rear – top – side
	0,57 - 1,24 kg/h		Ø 60 mm

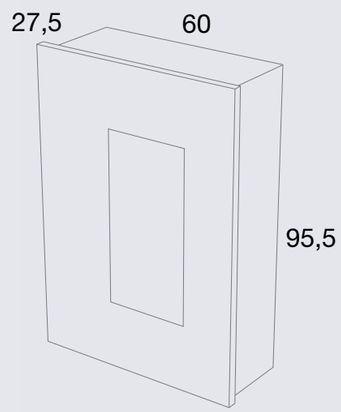

STOVE PACKAGING

W (cm)	H (cm)	D (cm)
107	44,8	80

VOLUME (m³)
0,38

STORAGE

N° (max)
5

EUROPEAN STANDARDS

CE
EN 14785:2006

Art. 15A B-VG 2015
BImSchV 2015
Regensburg
München
Stuttgart
Aachen

ECO DESIGN 2022

A+
ENERGY LABELLING

Prodotto in possesso dei requisiti per il raggiungimento delle 4 stelle ARIA PULITA.

TABLA

‘Space-saving’ air pellet stove with an essential design, ideal for those who don’t have much space, but still want to enjoy a warm and cosy environment.
Painted steel cladding and cast iron door.

»AIR SLIM«

TABLA white

7 kW

Metal structure, sides and top
Cast iron burning pot and door
Daily/weekly programming
Designed for connection to the external thermostat
Remote control available as optional extra

MAX	7 kW		19,7 - 7,1 h
MIN	2,7 kW		72 W
	7,82 kW		60 kg
%	89,5 %		71 x 27,5 x H 95,5 cm
	12 kg		0,38 m³
	Pellet Ø 6 mm		Ø 80 mm Rear – top – side
	0,61 - 1,7 kg/h		Ø 60 mm

TABLA anthracite

TABLA red

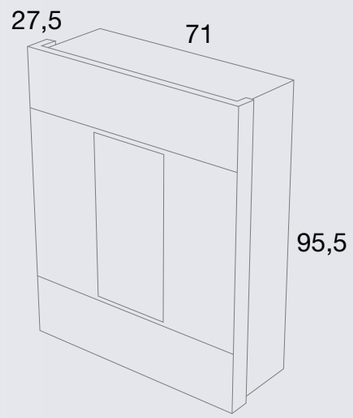

STOVE PACKAGING

W (cm)	H (cm)	D (cm)
107	44,8	80

VOLUME (m³)
0,38

STORAGE

N° (max)
5

EUROPEAN STANDARDS

CE
EN 14785:2006

ECO DESIGN 2022

A+
ENERGY LABELLING

certificazione ariaPULITA
ZM8-P-041
certificazionearia pulita.it

BImSchV 2015
Regensburg
München
Stuttgart
Aachen

OK BBC

klima+ energie fonds

CONTO TERMICO

SABA 14 NEW

14 kW ductable pellet stove with option to heat the room where it is installed and adjacent ones. Painted steel cladding.

AIR MULTI

SABA 14 anthracite

14 kW

Metal structure, sides, top, cast iron door and brazier
Daily/weekly programming
Ready for top and rear ducting
Designed for connection to the external thermostat
Top and rear smoke outlet
Front ventilation
Remote control available as optional extra

MAX	14 kW		26 - 6 h
MIN	3,6 kW		156,4 W
	15 kW		127 kg
%	87,5 %		54 x 57 x H 114 cm
	23 kg		0,74 m³
	Pellet Ø 6 mm		Ø 80 mm rear - top
	0,9 - 4,0 kg/h		Ø 60 mm

SABA 14 red

SABA 14 white

STOVE PACKAGING

W (cm)	H (cm)	D (cm)
80	131,4	70

VOLUME (m³)
0,74

STORAGE

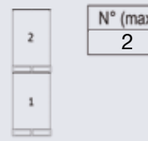

N° (max)
2

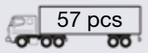

EUROPEAN STANDARDS

Art. 15A B-VG 2015
BImSchV 2015
Regensburg
München
Stuttgart
Aachen

CE EN 14785:2006

ENERGY LABELLING

Prodotto in possesso dei requisiti per il raggiungimento delle 4 stelle ARIA PULITA.

Data to be defined and certifications pending

MIRA

A 16 kW hydro pellet stove with the option of ventilation to heat the room while saving money.
Painted steel cladding.

HYDRO

MIRA 16 red

MIRA 16

Metal structure, sides, door and top
Cast iron burning pot
Daily/weekly programming
Connection to the heating system
Ventilation
Air temperature sensor
Water temperature sensor
Designed for connection to the external thermostat

MIRA 16 white

MIRA 16 anthracite

MAX	16,2 kW		1 - 3,5 kg/h
MIN	4,7 kW		22 - 6,3 h
	17,4 kW		115 W
	12,9 kW		140 kg
	3,1 kW		51,5 x 52,5 x H 109 cm
%	93,3 %		0,74 m³
	22 kg		Ø 80 mm rear
	Pellet Ø 6 mm		Ø 50 mm

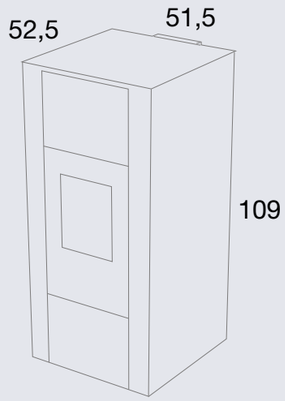

STOVE PACKAGING

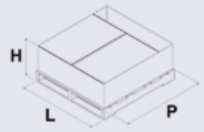

W (cm)	H (cm)	D (cm)
80	131,8	70

VOLUME (m³)
0,74

STORAGE

N° (max)
1

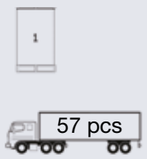

EUROPEAN STANDARDS

BImSchV 2015
Regensburg
München
Stuttgart
Aachen

CE EN 14785:2006

ENERGY LABELLING

Bundesamt für Wirtschaft und Ausfuhrkontrolle (BAFA)

Prodotto in possesso dei requisiti per il raggiungimento delle 4 stelle ARIA PULITA.

MIRA 22

Metal structure, sides, door and top
Cast iron burning pot
Daily/weekly programming
Connection to the heating system
Ventilation
Air temperature sensor
Water temperature sensor
Designed for connection to the external thermostat

MIRA 22
anthracite

MIRA 22
red

MIRA 22
white

MAX	22,8 kW		1,0 - 5,0 kg/h
MIN	4,7 kW		22 - 4,4 h
	25 kW		115 W
	18,7 kW		140 kg
	3,1 kW		51,5 x 52,5 x H 109 cm
%	91,3 %		0,74 m^3
	22 kg		Ø 80 mm rear
	Pellet Ø 6 mm		Ø 50 mm

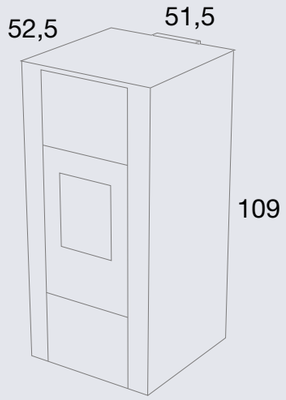

STOVE PACKAGING

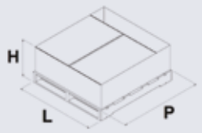

W (cm)	H (cm)	D (cm)
80	131,8	70

VOLUME (m^3)
0,74

STORAGE

N° (max)
3

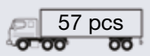

EUROPEAN STANDARDS

BImSchV 2015
Regensburg
München
Stuttgart
Aachen

EN 14785:2006

ENERGY LABELLING

Prodotto in possesso dei requisiti per il raggiungimento delle 4 stelle ARIA PULITA.

Bundesamt für Wirtschaft und Ausfuhrkontrolle (BAFA)

TECHNICAL SYMBOLS

MAX	Nominal power
MIN	Reduced power
	Fireplace power
	Effective power at nominal water flow
	Effective power at reduced water flow
%	Nominal efficiency
	Hopper capacity
	Pellet fuel
	Hourly consumption min/max
	Runtime at min/max
	Operating time max
	Weight
	Measurements
	Packaging volume
	Smoke exhaust
	Combustion air vent

The Trademark and the images in this catalogue/price list are the property of Cadel srl and their use must be authorised in writing by the Sales Management.
Improper, unlawful or unauthorised use of the Trademark and of the images may result in legal action, both civil and criminal, and/or possible compensation for damages.

87200003 - 01/20

Pegaso

Via Foresto sud, 7
31025 Santa Lucia di Piave (TV) Italy
Tel. +39 0438 738669 - Fax +39 0438 73343
contact@pegasoheating.com

MADE IN ITALY